Name: # OPTICS REVIEW EXEMPLAR /75

** The following are responses made by science students. Analyze their responses and fill-out the Strengths, Weaknesses, Improvements, Mark (SWIM) chart. Include a total mark out of 75, right-on = +7, within 2 marks = +5, within 4 = +3, within 6 = +1**

True/False: *Indicate whether the statement is true or false.* (20)

1. T An object that can be heated to such a high temperature that it emits visible light is called a fluorescent source.
2. T A firefly glowing in the night is an example of bioluminescence. S:
3. F Incandescent lighting is much more energy-efficient than fluorescent lighting.
4. T The most abundant source of light is the Sun.
5. T A normal is a line that is parallel to the reflected surface.
6. T Light is the only form of energy that can travel like a wave through empty space and through some materials.
7. F The angle between the incident ray and the normal is called the angle of incidence.
8. F Reflection occurs when light bounces off a surface. W:
9. T Reflection occurs when light bounces off a surface.
10. F Images in plane mirrors are always upright, real, and larger than the object.
11. T When an object is placed closer to a concave mirror than *F*, the image will always be upright and virtual.
12. T Images in concave mirrors are always virtual.
13. F The principal axis passes through the centre of curvature of the mirror.
14. T Real and virtual images are both formed by reflected (and refracted) rays. I:
15. T The angle of incidence that produces a refracted ray at an angle of 90° from the normal is called the critical angle.
16. T You must be looking toward the Sun to see a rainbow.
17. F A rainbow forms when sunlight enters a water droplet and refracts, reflects off the inner surface of the droplet, and then refracts again when leaving the droplet.
18. T Hyperopia, also known as far-sightedness, is the condition in which the eye cannot focus on nearby objects. M:
19. T In the human eye, the lens is the coloured ring that functions like the diaphragm of a camera.
20. F Lens are classified based on the overall effect that lenses have on parallel rays of light that pass through them.

Multiple Choice: *Identify the choice that best answers the question.* (5)

21. Which of the following is the opening in your eye through which light enters?
a. retina
b. optic nerve
c. pupil
d. iris

S:

22. The image seen in a convex mirror, in comparison with the object, is always
a. smaller and upright.
b. larger and upright.
c. smaller and inverted.
d. larger and inverted.

23. What is the image distance if an object with a height of 2.5 cm is placed 40 cm in front of a concave mirror with focal length 12 cm?
a. 13 cm
b. 15 cm
c. 17 cm
d. 19 cm

$\frac{h_i}{h_o} = \frac{-d_i}{d_o}$ $d_i = \frac{-h_i d_o}{h_o}$

$d_i = -\frac{(12)(40)}{(2.5)} =$ W:

24. What is the magnification of a mirror of focal length 10 cm if a 12-cm high object appears to be 18 cm tall?
a. 2.0
b. 1.5
c. 1.75
d. 1.2

$M = \frac{h_i}{h_o} = \frac{18}{12} \rightarrow M = 1.5$

I:

25. Refraction ...
a. can be transformed into chemical energy, electrical energy, or thermal energy.
b. allows no light to pass through it.
c. is the bending of light as it passes from one medium to another.
d. occurs when light bounces off a surface.

M:

Matching: (15)

Identify the cause that best matches the optical phenomena given.

a. caused by uneven heating of air b. caused by interaction of light with water

26. a sundog
27. b mirage
28. b shimmering
29. a apparent depth
30. a rainbow

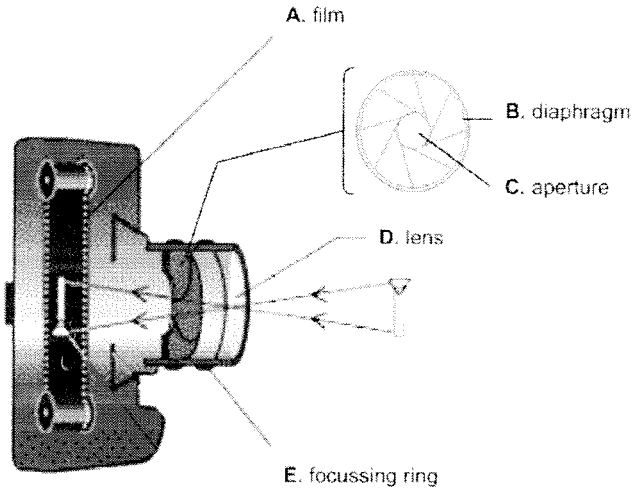

Identify the part of the camera that best matches the part of the human eye given.

31. A retina
32. B pupil
33. D ciliary muscle
34. C lens
35. E iris

Identify the term that best matches the definition or description given.

a. radiation
b. radiant energy
c. radiates
d. nuclear fusion
e. light

36. b type of energy transfer that does not require matter
37. c spreads out in all directions
38. e energy that travels by radiation
39. a a form of energy that can be seen
40. d process that produces the Sun's light

41. A convex security mirror in a hardware store has a focal length of -0.50 m. A boy who is 1.5 m tall is standing 4.0 m in front of the mirror.

a) Calculate the image distance. Show your work. (3)

S:

$$\frac{1}{f} = \frac{1}{d_o} + \frac{1}{d_i}$$

$$\frac{1}{d_i} = \frac{1}{f} - \frac{1}{d_o}$$

$$= \frac{1}{-0.5} - \frac{1}{4.0}$$

$$= -2.25\,m$$

∴ the image distance is -2.25m

W:

I:

M:

b) Calculate the image height. Show your work. (3)

S:

$$\frac{h_i}{h_o} = \frac{-d_i}{d_o}$$

W:

$$h_i = \frac{-d_i h_o}{d_o}$$

$$= \frac{-(-2.25)(4.0)}{(1.5)}$$

I:

$$= 6m$$

M:

42. Draw a fully labeled ray diagram and fill-in the L.O.S.T. table (8)

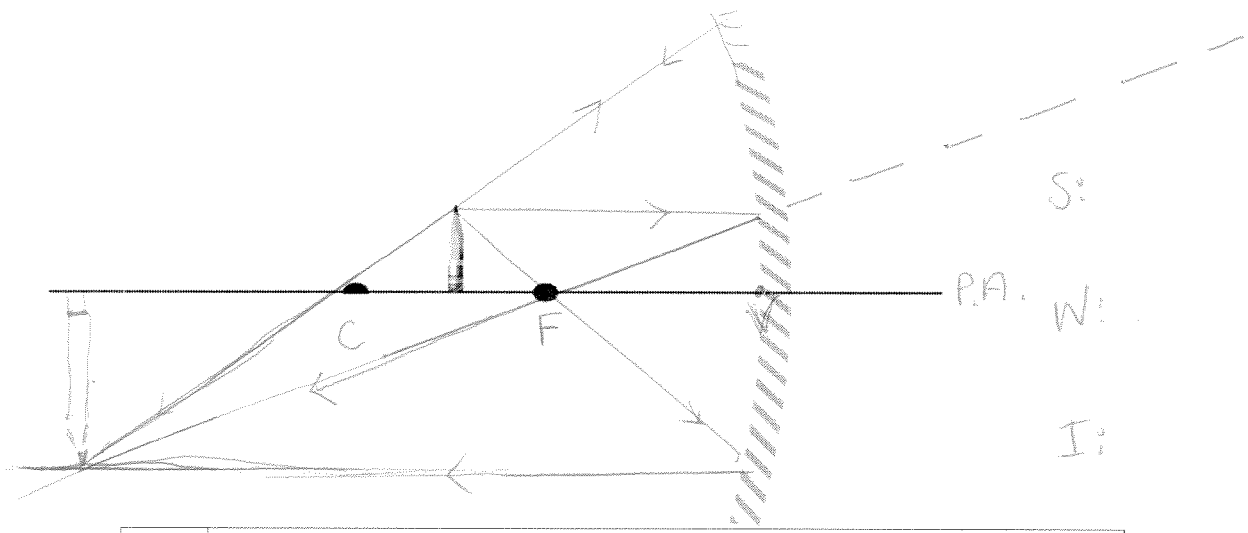

S:

W:

I:

M:

L	farther
O	inverted
S	larger
T	real

Use the accompanying table to answer the following question(s).

Substance	Index of Refraction (n)
Vacuum	1.000 00
Gases at 0°C and 101.3 kPa	
Hydrogen	1.000 14
Oxygen	1.000 27
Air	1.000 29
Carbon dioxide	1.000 45
Liquids at 20°C	
Water	1.333
Ethyl alcohol	1.362
Glycerol	1.470
Carbon disulfide	1.632

43. Calculate the speed of light in glycerol. (3)

S:

$c = nv$

$= (1.470)(3.0 \times 10^5)$

$\doteq 4.41 \times 10^5$ m/s

W:

I:

M:

44. An object 5-cm tall is placed 5 cm from a converging lens with a focal length of 10 cm.

a) Calculate the image distance. (3)

S:

$\frac{1}{f} = \frac{1}{d_o} + \frac{1}{d_i}$

$\frac{1}{d_i} = \frac{1}{f} - \frac{1}{d_o}$

$= \frac{1}{10} - \frac{1}{5}$

$d_i = -10$ cm

W:

I:

b) Calculate the image height. (3)

M:

$\frac{h_i}{h_o} = \frac{-d_i}{d_o}$

$h_i = \frac{-d_i h_o}{d_o}$

$h_i = -\frac{(-10)(5)}{(5)}$

$= 10$ cm

S:

W:

I:

M:

c) State the image characteristics. (3)

farther, upright, same, virtual

d) Draw a fully-labeled, scaled diagram to confirm your work in #44 a-c. (9)

S:

L - closer
U - inverted
S - bigger
T - real

W:

I:

M: