Solutions to Practice Problems in Chapter 10 Electrochemical Cells

Using Half-Reactions to Sketch a Galvanic Cell
(Student textbook page 641)

1. In a galvanic cell involving zinc and magnesium, which electrode will be the anode and which will be the cathode?

What Is Required?
You are asked to identify the anode and cathode of a galvanic cell.

What Is Given?
You are given that one electrode is zinc and the second electrode is magnesium. You are also given Relative Strengths of Oxidizing and Reducing Agents, **Table 9.2** on page 587 of the student textbook.

Plan Your Strategy	Act on Your Strategy
Identify the stronger reducing agent from Table 9.2.	Between zinc and magnesium, magnesium is the stronger reducing agent.
Since the stronger reducing agent is always oxidized, and oxidation occurs at the anode, the anode can be identified.	Since magnesium is the stronger reducing agent, magnesium is oxidized and thus is the anode in the galvanic cell.
Once the anode is identified, the other electrode will be the cathode.	Given that the magnesium electrode is the anode, the zinc electrode must be the cathode.

Check Your Solution
The stronger reducing agent, according to Table 9.2, is the anode, and the weaker reducing agent is the cathode. The solution is correct.

2. Explain where the oxidation and the reduction are occurring in a galvanic cell involving zinc and magnesium.

What Is Required?
You are to identify where the oxidation and the reduction are occurring in a galvanic cell.

What Is Given?
You are given that one electrode is zinc and the second electrode is magnesium. You are also given Relative Strengths of Oxidizing and Reducing Agents, **Table 9.2** on page 587 of the student textbook.

Plan Your Strategy	Act on Your Strategy
Identify the stronger reducing agent from Table 9.2.	Between zinc and magnesium, magnesium is the stronger reducing agent.
Since the stronger reducing agent is always oxidized, oxidation occurs at the anode.	Oxidation occurs at the magnesium electrode.
The weaker reducing agent is always reduced and reduction occurs at the cathode.	Reduction occurs at the zinc electrode.

Check Your Solution
Oxidation occurs at the electrode that is the stronger reducing agent, and reduction occurs at the electrode that is the weaker reducing agent. The solution is correct.

3. Draw a diagram of a galvanic cell involving zinc and magnesium, and indicate the direction of electron flow.

What Is Required?
You are to draw a galvanic cell, labelling the anode, the cathode, and the direction of electron flow.

What Is Given?
You are given the electrodes of magnesium and zinc for this galvanic cell.

Plan Your Strategy	Act on Your Strategy
Identify the pieces of the galvanic cell.	The magnesium is the anode—the site of oxidation, where magnesium ions flow into solution and electrons leave the electrode and flow through the voltmeter as they move to the zinc cathode. The zinc is the cathode—the site of reduction, where zinc ions flow onto the electrode as they pick up electrons.
Identify the direction of electron flow.	In a galvanic cell, electrons flow from the anode to the cathode, in this case, from the magnesium electrode to the zinc electrode.
Identify the ion flow in the half-cells.	Ions of magnesium will flow into the oxidation half-reaction as the atoms of magnesium lose electrons. Ions of zinc will flow onto the zinc electrode as they pick up electrons during the reduction.
Identify the ion flow in the salt bridge.	Negative ions in the salt bridge will migrate towards the oxidation half-reaction and positive charge builds up in the cell. Positive ions will migrate towards the reduction half-cell as positive charge is removed from the half-cell, leaving a net negative charge in this half-cell that will attract the positive ions in the salt bridge.
Sketch the apparatus, including the beakers, electrodes, conducting wires, voltmeter, salt bridge, and electron flow.	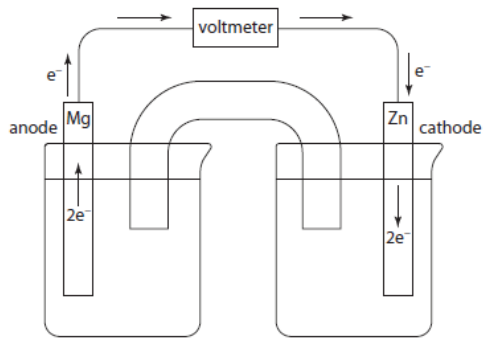

Check Your Solution
Electrons flow from the site of oxidation at the magnesium anode to the site of reduction at the zinc cathode. The drawing is correct.

4. Indicate the direction of the ionic movement in a galvanic cell involving zinc and magnesium.

What Is Required?
You are asked to determine the direction of the ionic movement in a galvanic cell.

What Is Given?
You are given that the electrodes of the galvanic cell are magnesium and zinc. You have also identified that the magnesium is the anode and the zinc is the cathode in the galvanic cell.

Plan Your Strategy	Act on Your Strategy
Identify the oxidation half-cell where electrons will be lost as positive ions flow into solution.	The magnesium atoms lose electrons and thus magnesium ions will flow into the magnesium half-cell.
Identify the reduction half-cell where the electrons will be gained as positive ions flow to the electrode.	The zinc ions in solution will flow onto the zinc electrode in the zinc half-cell.
Add the ion flow to your diagram.	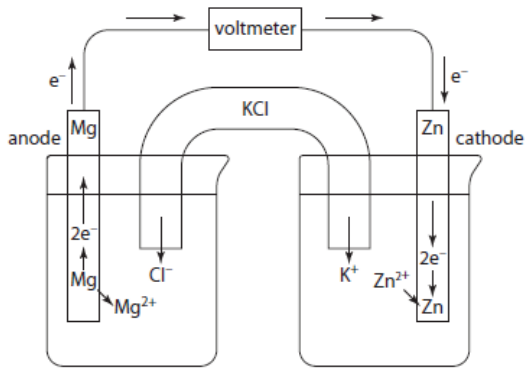

Check Your Solution
Positive magnesium ions flow from the site of oxidation at the magnesium anode into the solution. Positive zinc ions flow onto the site of reduction at the zinc cathode. The drawing is correct.

5. Write a balanced ionic equation that represents the reaction in a galvanic cell involving zinc and magnesium.

What Is Required?
You are asked to write a balanced ionic equation to represent a galvanic reaction.

What Is Given?
You are given the galvanic cell involving zinc and magnesium.

Plan Your Strategy	Act on Your Strategy
Write the oxidation half-reaction.	$Mg(s) \rightarrow Mg^{2+}(aq) + 2e^-$
Write the reduction half-reaction.	$Zn^{2+}(aq) + 2e^- \rightarrow Zn(s)$
Balance the electrons lost and gained in the two half-reactions.	The number of electrons lost is 2 and the number gained is 2, therefore the gain and loss are already balanced.
Combine the two half-reactions, cancelling the electrons lost and gained.	$Mg(s) + Zn^{2+}(aq) \rightarrow Zn(s) + Mg^{2+}(aq)$

Check Your Solution
The two sides are balanced by mass and charge. Therefore, the reaction is balanced.

6. In a galvanic cell involving nickel and silver, which electrode will be the anode and which will be the cathode?

What Is Required?
You are asked to identify the anode and cathode of a galvanic cell.

What Is Given?
You are given that one electrode is nickel and the second electrode is silver. You are also given Relative Strengths of Oxidizing and Reducing Agents, **Table 9.2** on page 587 of the student textbook.

Plan Your Strategy	Act on Your Strategy
Identify the stronger reducing agent from Table 9.2	Between nickel and silver, nickel is the stronger reducing agent.
Since the stronger reducing agent is always oxidized, and oxidation occurs at the anode, the anode can be identified.	Since nickel is the stronger reducing agent, nickel is oxidized and thus is the anode in the galvanic cell.
Once the anode is identified, the other electrode will be the cathode.	Given that the nickel electrode is the anode, the silver electrode must be the cathode.

Check Your Solution
The stronger reducing agent, according to Table 9.2, is the anode, and the weaker reducing agent is the cathode. The solution is correct.

7. Explain where the oxidation and the reduction are occurring in a galvanic cell involving silver and nickel.

What Is Required?
You are to identify where the oxidation and the reduction are occurring in a galvanic cell.

What Is Given?
You are given that one electrode is silver and the second electrode is nickel. You are also given Relative Strengths of Oxidizing and Reducing Agents, **Table 9.2** on page 587 of the student textbook.

Plan Your Strategy	Act on Your Strategy
Identify the stronger reducing agent from Table 9.2.	Between silver and nickel, nickel is the stronger reducing agent.
Since the stronger reducing agent is always oxidized, oxidation occurs at the anode.	Oxidation occurs at the nickel electrode.
The weaker reducing agent is always reduced and reduction occurs at the cathode.	Reduction occurs at the silver electrode.

Check Your Solution
Oxidation occurs at the electrode that is the stronger reducing agent, and reduction occurs at the electrode that is the weaker reducing agent. The solution is correct.

8. Draw a diagram of a galvanic cell involving silver and nickel, and indicate the direction of electron flow.

What Is Required?
You are to draw a galvanic cell, labelling the anode, the cathode, and the direction of electron flow.

What Is Given?
You are given the electrodes of nickel and silver for this galvanic cell.

Plan Your Strategy	Act on Your Strategy
Identify the pieces of the galvanic cell.	The nickel is the anode—the site of oxidation where nickel ions flow into solution and electrons leave the electrode and flow through the voltmeter as they move to the silver cathode. The silver is the cathode—the site of reduction where silver ions flow onto the electrode as they pick up electrons.
Identify the direction of electron flow.	In a galvanic cell, electrons flow from the anode to the cathode, in this case, from the nickel electrode to the silver electrode.
Identify the ion flow in the half-cells.	Ions of nickel will flow into the oxidation half-reaction as the atoms of nickel lose electrons. Ions of silver will flow onto the silver electrode as they pick up electrons during the reduction.
Identify the ion flow in the salt bridge.	Negative ions in the salt bridge will migrate towards the oxidation half-reaction and positive charge builds up in the cell. Positive ions will migrate towards the reduction half-cell as positive charge is removed from the half-cell, leaving a net negative charge in this half-cell that will attract the positive ions in the salt bridge.
Sketch the apparatus, including the beakers, electrodes, conducting wires, voltmeter, salt bridge, and electron flow.	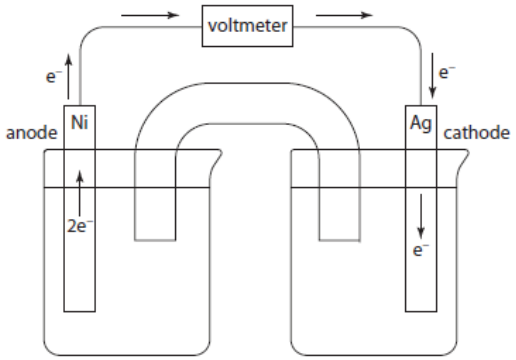

Check Your Solution
Electrons flow from the site of oxidation at the nickel anode to the site of reduction at the silver cathode. The drawing is correct.

9. Indicate the direction of the ionic movement in a galvanic cell involving silver and nickel.

What Is Required?
You are asked to determine the direction of the ionic movement in a galvanic cell.

What Is Given?
You are given that the electrodes of the galvanic cell are nickel and silver. You have also identified that the nickel is the anode and the silver is the cathode in the galvanic cell.

Plan Your Strategy	Act on Your Strategy
Identify the oxidation half-cell where electrons will be lost as positive ions flow into solution.	The nickel atoms lose electrons and thus nickel ions will flow into the nickel half-cell.
Identify the reduction half-cell where the electrons will be gained as positive ions flow to the electrode.	The silver ions in solution will flow onto the silver electrode in the silver half-cell.
Add the ion flow to your diagram.	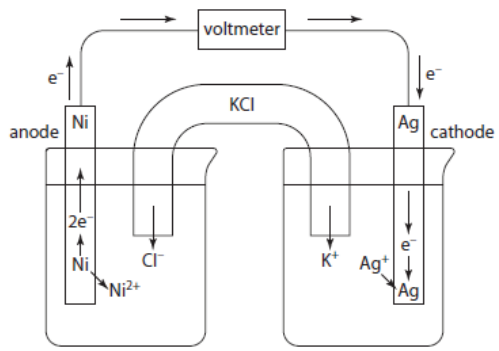

Check Your Solution
Positive nickel ions flow from the site of oxidation at the nickel anode into the solution. Positive silver ions flow onto the site of reduction at the silver cathode. The drawing is correct.

10. Write a balanced ionic equation that represents the reaction in a galvanic cell involving silver and nickel.

What Is Required?
You are asked to write a balanced ionic equation to represent a galvanic reaction.

What Is Given?
You are given the galvanic cell involving silver and nickel.

Plan Your Strategy	Act on Your Strategy
Write the oxidation half-reaction.	$Ni(s) \rightarrow Ni^{2+}(aq) + 2e^-$
Write the reduction half-reaction.	$Ag^+(aq) + e^- \rightarrow Ag(s)$
Balance the electrons lost and gained in the two half-reactions.	The number of electrons lost is 2 and the number gained is 1. Therefore, the gain needs to be multiplied by 2. $2Ag^+(aq) + 2e^- \rightarrow 2Ag(s)$
Combine the two half-reactions, cancelling the electrons lost and gained.	$Ni(s) + 2Ag^+(aq) \rightarrow 2Ag(s) + Ni^{2+}(aq)$

Check Your Solution
The two sides are balanced by mass and charge. Therefore, the reaction is balanced.